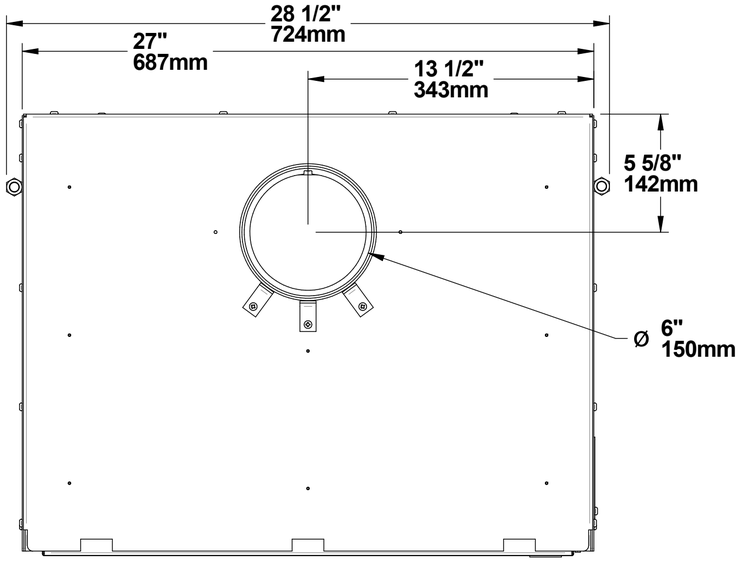

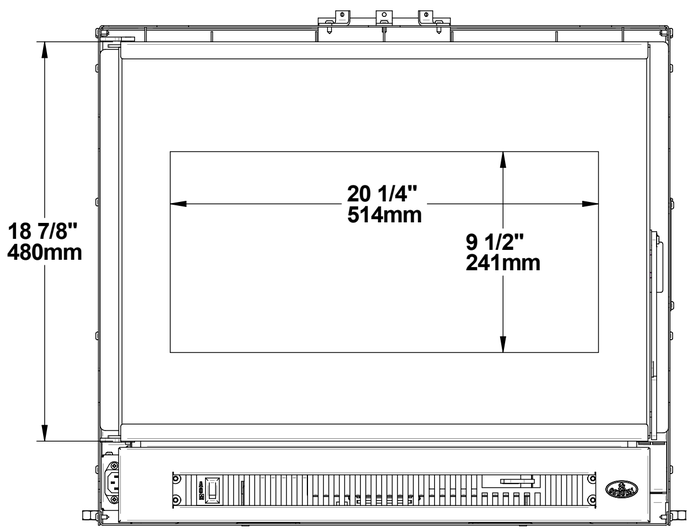

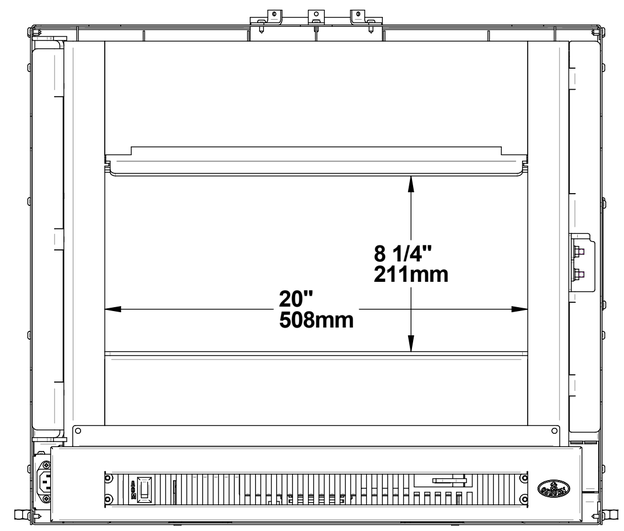

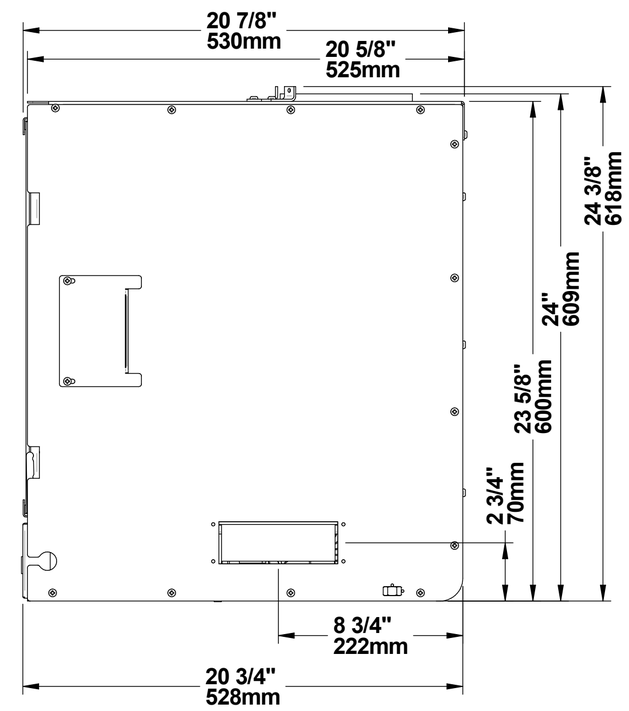

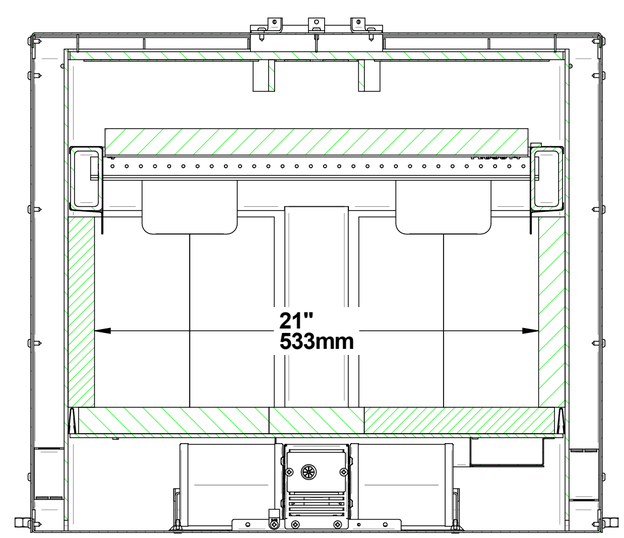

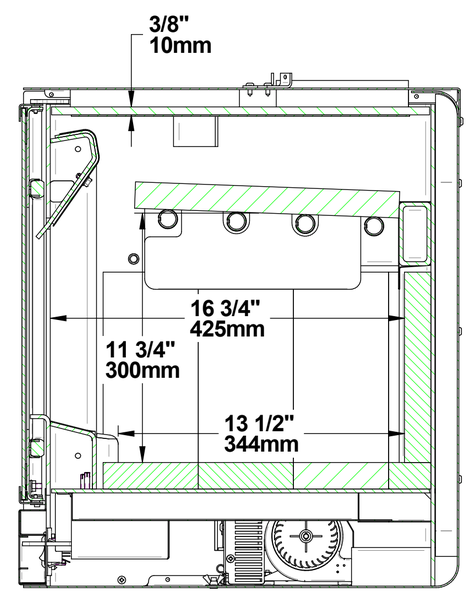

© 2018, FABRICANT DE POÊLE INTERNATIONAL INC. TOUS DROITS RESERVÉS / ALL RIGHTS RESERVED